REV.	ECN NO.	LOCATIONS	DESCRIPTION	DATE	DESIGN
A2			Update the component with cap	08/26'24	Davis

CUSTOMER DRAWING

RoHS Compliant

ORDERING INFORMATION

PD97M - 08V200C G 03
1 2 3 4

1 PRODUCT SERIES
Pogo connector – Male type.

2 SPEC NOTES.:
2*4Pin/ Pitch2.00mm
5.50mm Height/Vertical
With Cap type

3 PLATING MATERIAL:
G: Gold(Au).

4 PLATING THICKNESS:
03: 3u"

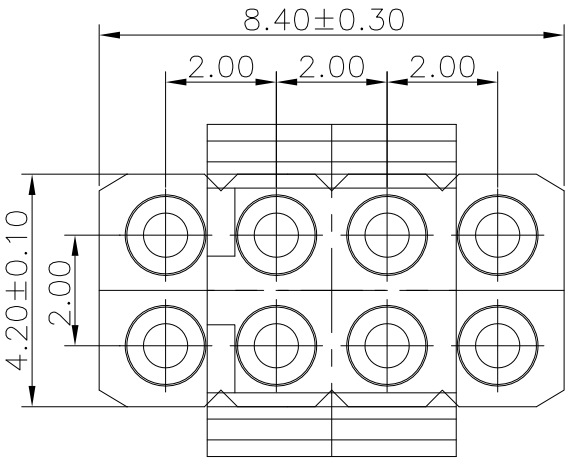

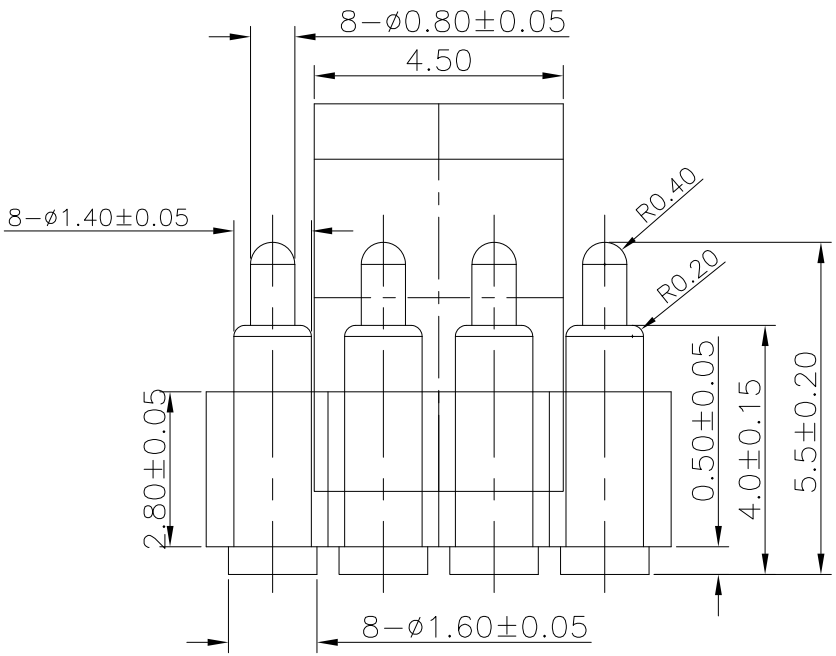

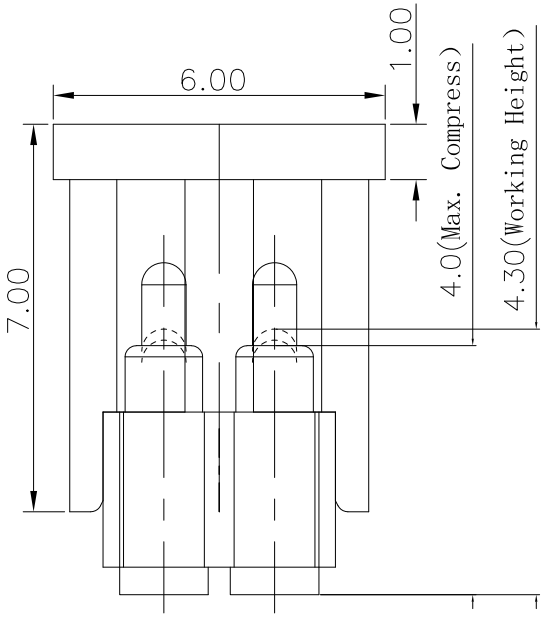

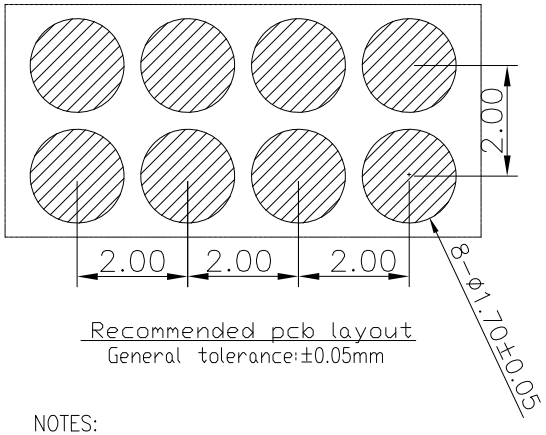

Recommended pcb layout
General tolerance:±0.05mm

NOTES:

(1)Material:
1. Plunger: Copper Alloy.
2. Barrel: Copper Alloy.
3. Spring: Stainless Steel.
4. Housing: High Temperature Thermoplastic, UL 94V-0.

(2)Plating:
1. Plunger: 3u" Gold plated over Nickel under-plated over all.
2. Barrel: 3u" Gold plated over Nickel under-plated over all.

(3)Mechanical:
1. Working Height: 4.80mm.
2. Spring force: 100g±20% at working height.
3. Durability :10,000 cycles Min.

(4)Electrical:
1. Current Rating :1.0A AC/DC max.
2. Voltage Rating :12V AC/DC max.
3. Contact Resistance: 50mΩmax.

DIM	TOL	DIM	TOL
X.X	±0.30	X.X°	±3.0°
X.XX	±0.20	X.XX°	±2.0°
X.XXX	±0.10	X.XXX°	±1.0°

SUNFUN	SUNFUN TECHNOLOGY LTD			
DRAW NO.	PD97M-08V200C(A2)	DATE	MATERIAL: SEE NOTES	DRAW NAME: POGO PIN CONN – MALE/Vertical PITCH 2.00MM/ 2*4PIN/ Height 5.50MM WITH CAP TYPE
DESIGN:	Davis	08/26'24	FINISH: SEE NOTES	
CHECK:	Davis	08/26'24	FILE: PD97M-08V200C(A2)	MODEL: POGO-PIN CONN
REVIEW:	Wilson	08/26'24	P/N: PD97M-08V200CG03	UNIT: mm / SHEET: 1/1
APPROVED	Wilson	08/26'24	REV. A2 / SCALE	